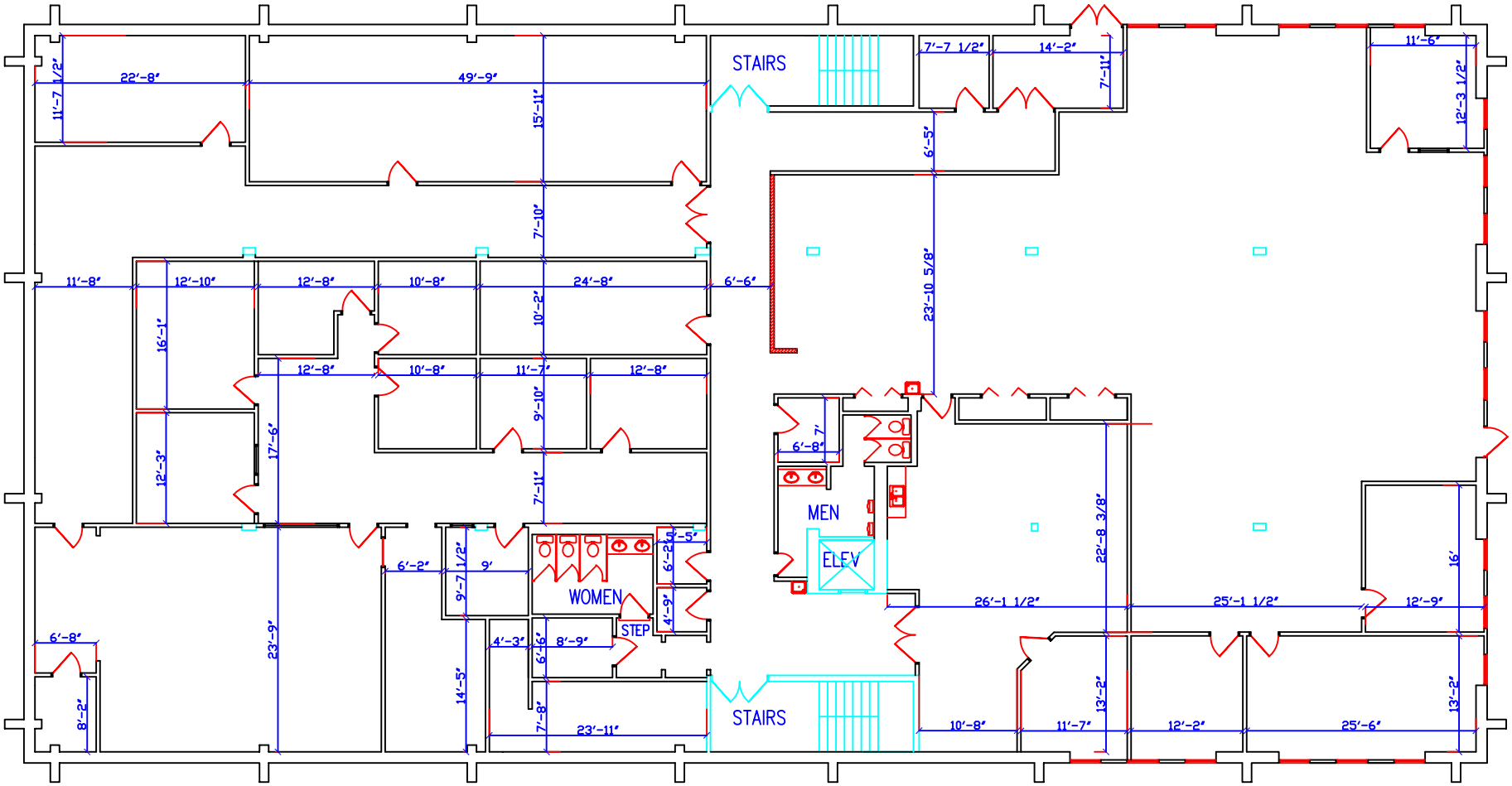

FLOOR SQUARE FOOTAGE	BUILDING	BUILING LEVEL	DATE REVISED	track planz, inc.
11,958 SQ.FT. PEYTON'S 375 SQ.FT. COMMON 12,333 SQ.FT. TOTAL	310 WHITTINGTON PARKWAY HURSTBOURNE OFFICE PARK LOUISVILLE, KENTUCKY	GROUND FLOOR	3-22-05	1453 south second street louisville, kentucky 40208 502-634-5633 502-821-1199 e-mail: rkmdesignz@aol.com

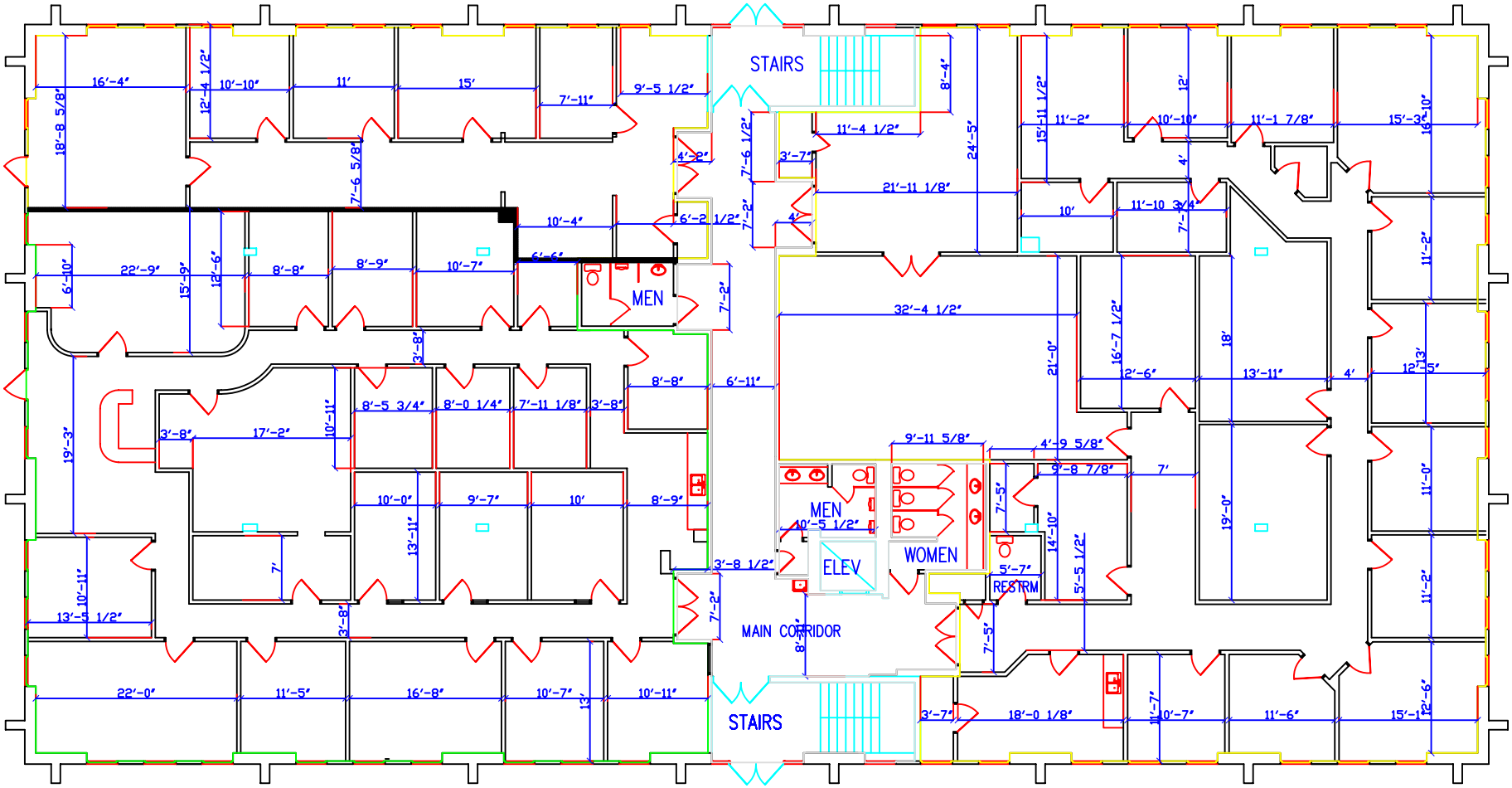

FLOOR SQUARE FOOTAGE	BUILDING	BUILING LEVEL	DATE REVISED	
6,792 SQ.FT. KY BOARD OF MEDICAL LICENSURE 4,146 SQ.FT. VACANT 1,339 SQ.FT. COMMON 12,277 SQ.FT. TOTAL	310 WHITTINGTON PARKWAY HURSTBOURNE OFFICE PARK LOUISVILLE, KENTUCKY	1st FLOOR	3-22-05	track planz, inc. 1453 south second street louisville, kentucky 40208 502-634-5633 502-821-1199 e-mail: rkmdesignz@aol.com

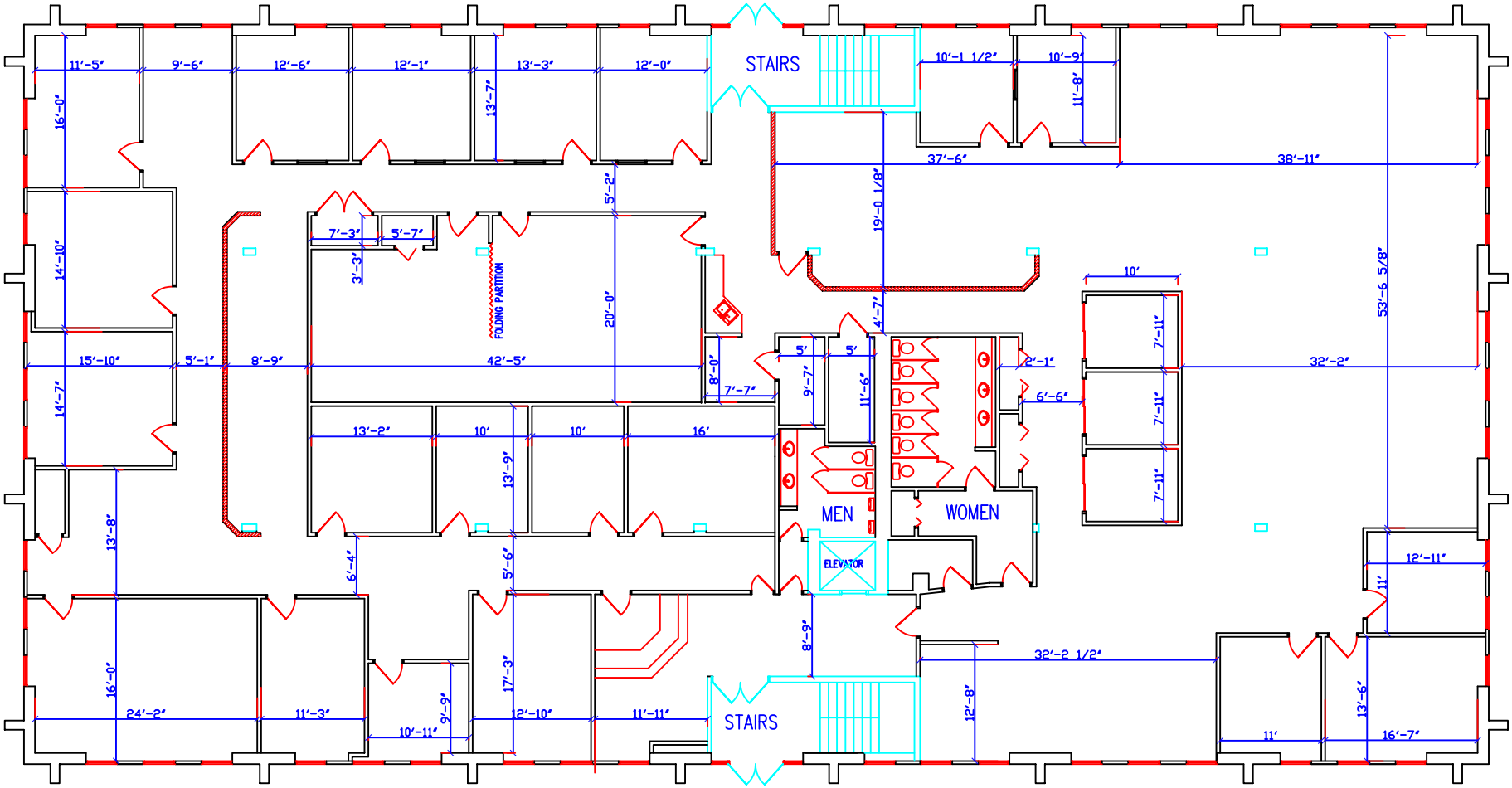

FLOOR SQUARE FOOTAGE	BUILDING	BUILING LEVEL	DATE REVISED	track planz, inc.
12,186 SQ.FT. PEYTON'S 405 SQ.FT. PEYTON'S 12,591 SQ.FT. TOTAL	310 WHITTINGTON PARKWAY HURSTBOURNE OFFICE PARK LOUISVILLE, KENTUCKY	2nd FLOOR	3-22-05	1453 south second street louisville, kentucky 40208 502-634-5633 502-821-1199 e-mail: rkmdesignz@aol.com